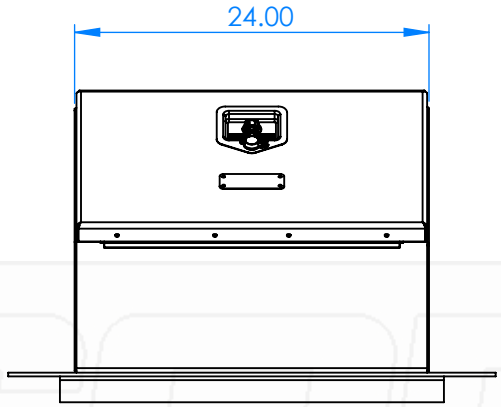

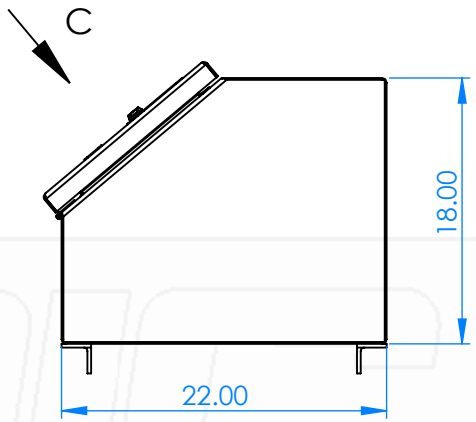

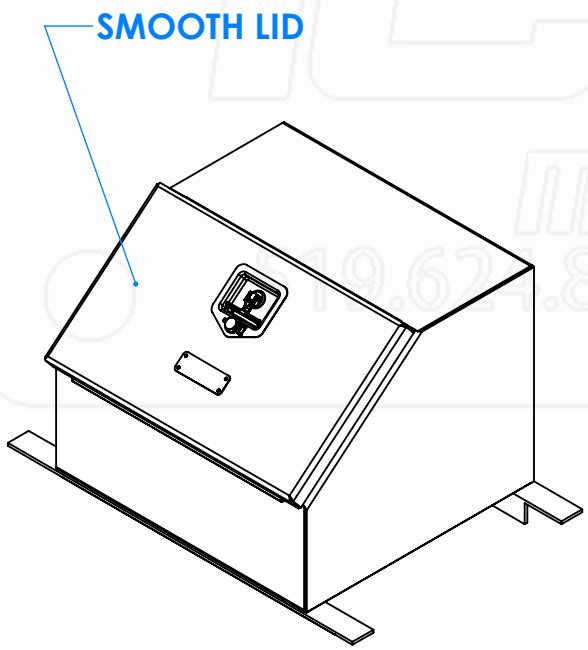

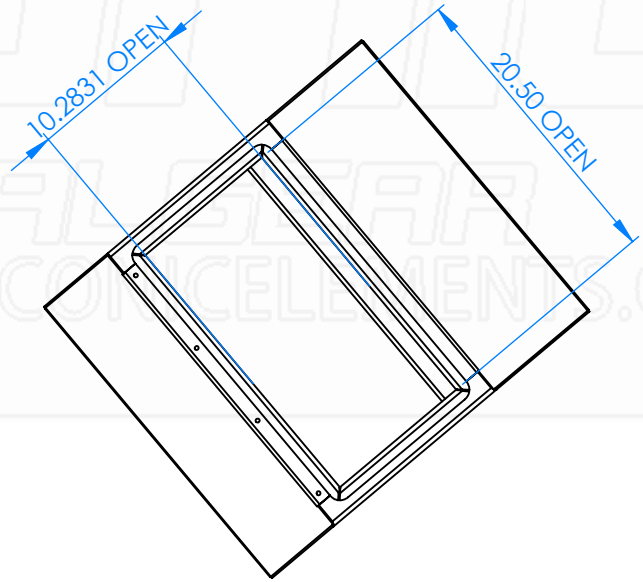

VIEW C
SCALE 1 : 13

ICONIC METALGEAR
949.624.8209 | ICONICELEMENTS.COM

Part No.:	MATERIAL: 5052 (Alum)	THICKNESS: 0.125	FINISH: Smooth	DWG. NO.: 3507-S-00-E	
1811	Approx. Weight: 41.25 lbs	**ICONIC ELEMENTS (ICONIC METALGEAR)**	TITLE:	REV:	SHEET:
	Surf. Area: 43.93 sq. ft.	PROPRIETARY AND CONFIDENTIAL NO PART OF THIS DOCUMENT MAY BE REPRODUCED, STORED IN A RETRIEVAL SYSTEM, OR TRANSMITTED IN ANY FORM, WITHOUT THE WRITTEN PERMISSION OF Iconic Elements Inc. (ICONIC METALGEAR)	24" Boot Box (SM Lid)	E	1 OF 1

5 4 3 2 1

D C B A